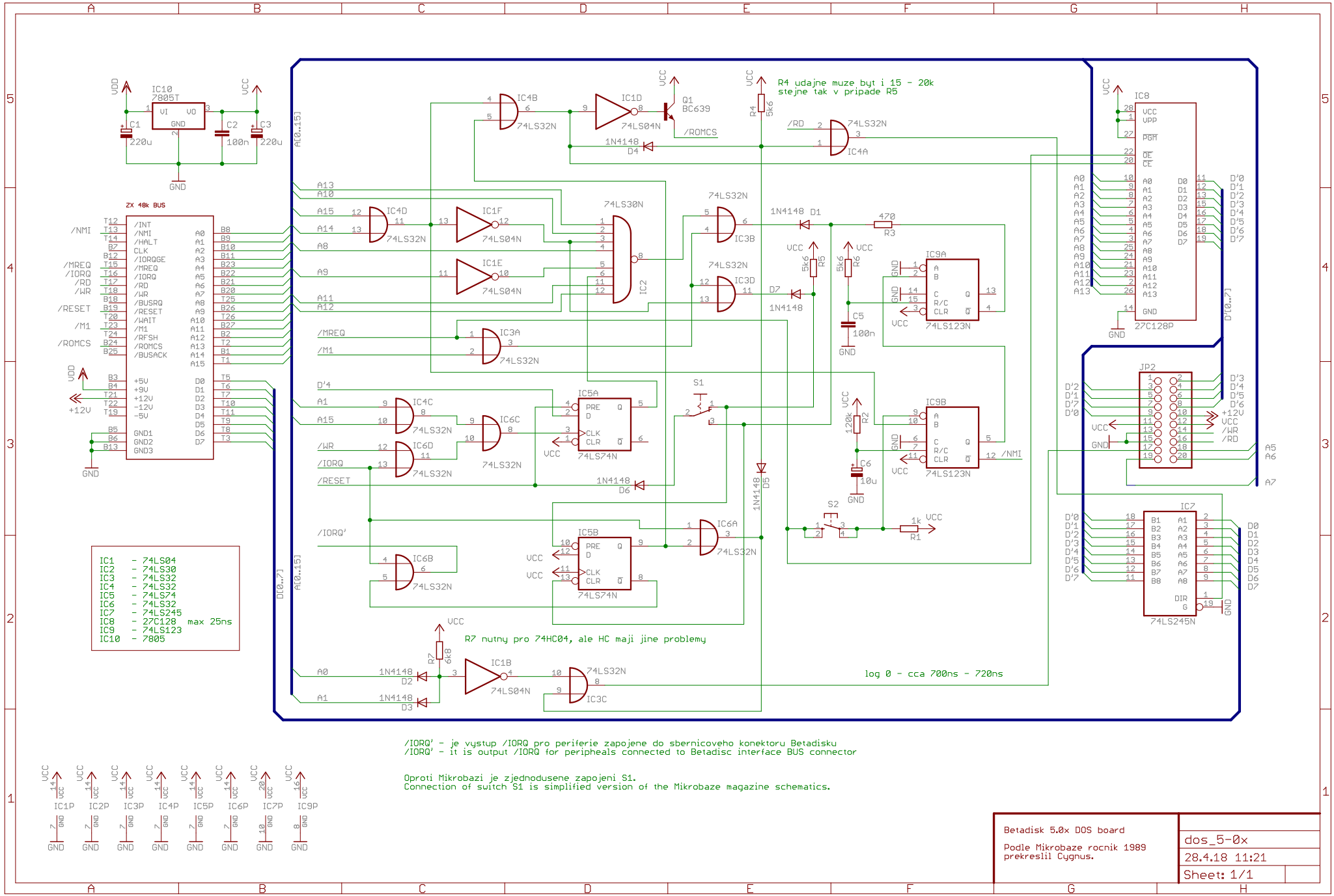
IC10 7805T
C1 220u
C2 100n
C3 220u
ZX 48k BUS
IC1 - 74LS04
IC2 - 74LS30
IC3 - 74LS32
IC4 - 74LS32
IC5 - 74LS74
IC6 - 74LS32
IC7 - 74LS245
IC8 - 27C128 max 25ns
IC9 - 74LS123
IC10 - 7805
R4 udajne muze byt i 15 - 20k
stejne tak v pripade R5
R7 nutny pro 74HC04, ale HC maji jine problemy
log 0 - cca 700ns - 720ns
/IORQ' - je vystup /IORQ pro periferie zapojene do sbernicoveho konektoru Betadisku
/IORQ' - it is output /IORQ for peripheals connected to Betadisc interface BUS connector
Oproti Mikrobazi je zjednodusene zapojeni S1.
Connection of switch S1 is simplified version of the Mikrobaze magazine schematics.
Betadisk 5.0x DOS board
Podle Mikrobaze rocnik 1989
prekreslil Cygnus.
dos_5-0x
28.4.18 11:21
Sheet: 1/1